Bergmann Dumper
3012 Rear tip

Strong arguments for your advantage

- high stability thanks to oscillating axle
- swivelling operator's stand
- electro-hydraulical spring type cylinder park brake
- compact dimensions with low weight

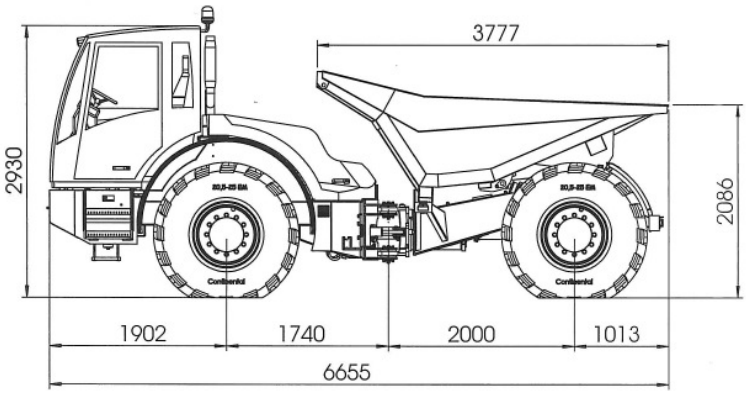

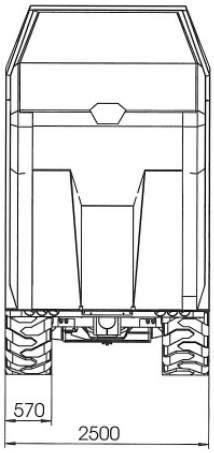

Bergmann Dumper
3012 rear tip

Technical Data

Weight / Bucket capacity	Payload	12.000 kg
	Unladen weight	10.020 kg
	Bucket capacity struck	5.000 l
	Bucket capacity heaped	ca. 8,5 m^3
	Bucket system	Hydraulical rear tipper
Dimensions	Height with cabine	2.930 mm
	Total length	6.650 mm
	Total width	2.500 mm
	Ground clearance	400 mm

Transmission

Load-depending shift – shiftably by hand and automatically, self-adjusting optimisation of traction force and spped, speed control stepless forward and backwards, ZF-Ergo-Power transmission

1. gear	F	- 5 km/h	2. gear	F	- 9 km/h
3. gear	F	- 14 km/h	4. gear	F	- 21 km/h
5. gear	F	- 32 km/h	6. gear	F	- 40 km/h
1. gear	R	- 6 km/h	2. gear	R	- 14 km/h
3. gear	R	- 34 km/h			

Steering

Hydraulical articulated steering acting over priority valve
articulation: 37° left & right

Axles / brakes

Front axle hydraulically absorbed, rear axle fix, maintenance-free-oil-bath multi-disc brake in the wheel hubs with self-locking differential with a locking value of 45 %, hydraulically applicated spring-type cylinder locking brake acting over articulated shaft on front and rear axle.

Engine

4-cylinder Deutz Diesel engine –water cooled-
power 119 KW with 2.200 rpm

Tyres

Standard 20.5 R 25 double coin

Bonnet

Easy access to all maintenance and service points thanks to wide opening sectioned bonnet

Tank capacity

Fuel 190 L
Hydraulic oil 81 L

Electrics

24 V electric system with main switch, fault finding modus, fuel and hour counter, control lamps for engine oil, parking brake, driving direction display, battery charging control, hydraulic filter, display for drive position

Standard equipment

Comfortable driver's cab with air-suspended driver's seat, swivelling operator's stand, lighting system according to German traffic regulations, bucket from abraision proof fine grain steel, flashing yellow light, cigarette lighter, roller blind for front windscreen, device for radio, loudspeaker and antenna
EC declaration of conformity